Bilateral Earlobe Pulse Timing Measurement Device

By
Joshua Joseph
Mark Schmitt
Zhikaun Zhang

Project Proposal for ECE445, Senior Design, Spring 2026
TA: Shiyuan Duan

Feb/12/2026
Team No. 40

Abstract

Our PCB sensing system measures bilateral pulse arrival times by synchronizing a single-lead ECG with dual-channel earlobe PPG sensors. The hardware architecture utilizes low-noise analog front-ends and a shared-clock data acquisition strategy to maintain multichannel timing jitter. The system is designed to compute ECG-referenced PPT across varying physical orientations, including neutral and head-tilt positions (or special cases like stroke and other medical symptom) . Success is defined by the simultaneous acquisition of clear ECG R-peaks and stable PPG waveforms from both earlobes. By achieving submillisecond synchronization, this platform provides a dedicated hardware tool for quantifying bilateral timing variances introduced by body posture.

Contents

1. Introduction.

1.1 Problem.

1.2 Solution.

1.3 Visual Aid.

2 Design.

2.1 Block Diagram.

2.2 Subsystem Overview.

2.2.1 Power Subsystem.

2.2.2 ECG Analog Front-End System.

2.2.3 Dual PPG Subsystem.

2.2.4 Data Acquisition and Control Subsystem.

2.3 Subsystem Requirements.

2.3.1 Power Subsystem Requirements.

2.3.2 ECG Subsystem Requirements.

2.3.3 Dual PPG Subsystem Requirements.

2.4 Tolerance Analysis.

3. Ethics, Safety, and Societal Impact

1. Introduction

1.1 Problem

Pulse transit time (PTT) is widely studied as a non-invasive physiological metric that reflects cardiovascular dynamics, vascular stiffness, and autonomic regulation. Conventional PTT systems typically measure the time delay between an ECG R-peak and a single peripheral photoplethysmography (PPG) waveform, often at the finger or ear. While these systems provide useful global timing information, they do not enable synchronized bilateral comparisons of pulse arrival times.

Currently, there is a lack of low-cost, synchronized hardware platforms capable of acquiring multi-channel physiological signals with sub-millisecond timing precision. In particular, no readily available measurement tools allow controlled bilateral pulse timing comparison between the left and right earlobes. Without such synchronized acquisition hardware, it is difficult to investigate whether posture, head orientation, or asymmetric vascular conditions introduce measurable bilateral timing differences.

From a societal perspective, improved non-invasive cardiovascular sensing tools contribute to public health and preventive medicine. Cardiovascular disease remains a leading global cause of mortality. While this project does not aim to produce a clinical diagnostic device, it supports foundational measurement capabilities that could assist future research in vascular asymmetry, autonomic regulation, and wearable health monitoring systems. Moreover, affordable synchronized physiological measurement systems can broaden access to research tools in educational and low-resource environments.

1.2 Solution

This project proposes a custom PCB-based multi-channel physiological sensing platform capable of simultaneously acquiring:

- One ECG channel (cardiac timing reference)
- Two synchronized PPG channels (left and right earlobes)

The ECG channel provides a reliable R-peak reference for cardiac cycle timing. Two identical PPG sensing channels measure pulse waveforms at both earlobes. By computing pulse arrival times relative to the ECG R-peak, the system enables bilateral pulse timing comparison under controlled experimental conditions such as neutral posture, stroke, head tilt, or side-lying orientation.

The design emphasizes:

- Low-noise analog front-end circuitry
- Hardware-level time synchronization
- Shared sampling clock architecture
- Precise multi-channel ADC acquisition

All channels are sampled using a shared clock source to minimize relative timing jitter. Bluetooth, if implemented, is used strictly for data transmission and not for timing synchronization.

The system is positioned as a measurement and validation tool rather than a medical diagnostic device. Its primary purpose is to provide synchronized physiological waveform acquisition with sufficient timing precision to analyze bilateral pulse transit differences.

1.3 Visual Aid

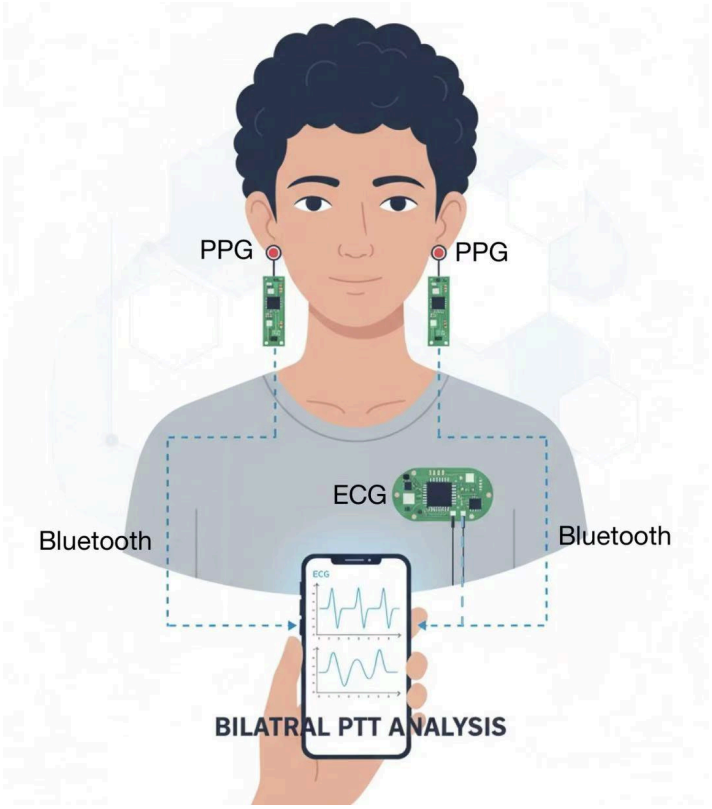

Figure 1. Context diagram of bilateral earlobe pulse timing measurement system.

1.4 High-level requirements list:

- The system shall display real-time ECG and bilateral PPG waveforms on a mobile device and compute the pulse transit time (PTT) between the left and right earlobes in real time.
- The system shall acquire an ECG waveform with clearly identifiable R-peaks under resting conditions. The system shall have the ability to acquire two PPG signals from left and right earlobes.
- A time synchronization mechanism shall be implemented to align data streams transmitted from three separate PCB modules over Bluetooth, ensuring that inter-board timing misalignment does not introduce significant error in PTT computation.

2. Design

2.1 Block Diagram

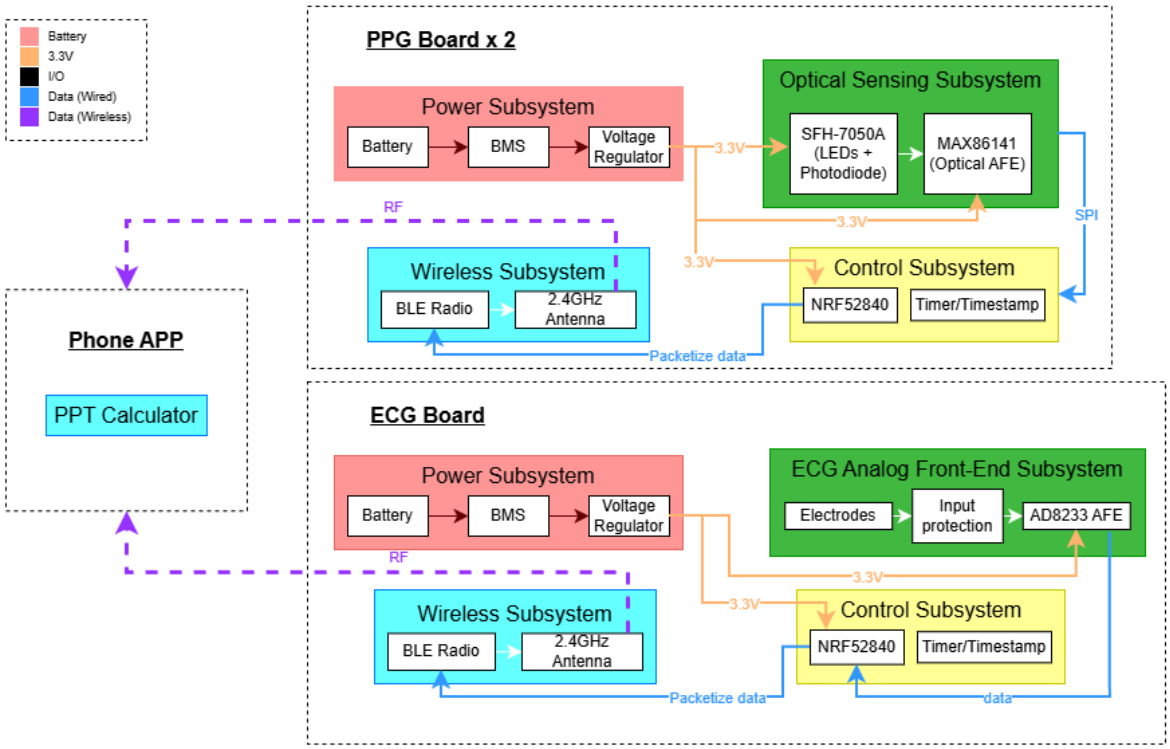

Figure 2. Block diagram of bilateral earlobe pulse timing measurement system.

2.2 Subsystem Overview

2.2.1 Power Subsystem

The power subsystem provides regulated and low-noise supply voltages for both analog and digital circuitry. It converts input power from USB (5V) or battery source into stable 3.3V and 5V rails as required. Separate filtering and decoupling networks are implemented to isolate analog front-end circuits from digital switching noise. The power subsystem ensures that voltage ripple does not degrade ECG and PPG signal integrity.

2.2.2 ECG Analog Front-End Subsystem

The ECG subsystem acquires a low-amplitude biopotential signal (typically 0.5–3 mV) from chest electrodes. The subsystem consists of:

- Instrumentation amplifier (e.g., AD8232)
- High-pass filter (~0.5 Hz cutoff)
- Low-pass filter (~40 Hz cutoff)
- Driven right-leg (DRL) circuit for common-mode rejection

The amplified and filtered ECG signal is fed into the ADC of the microcontroller. This channel provides the R-peak reference required for pulse transit time computation.

2.2.3 Dual PPG Subsystem

This subsystem contains two identical optical sensing channels placed on the left and right earlobes. Each channel includes:

- PPG sensor (MAX86141 and SFH-7050A)
- LED driver control
- Photodiode
- Anti-aliasing low-pass filter (maybe)

Both PPG channels are sampled simultaneously to ensure accurate bilateral timing comparison. Optical shielding is implemented to reduce ambient light interference.

2.2.4 Data Acquisition and Control Subsystem

This subsystem coordinates sampling, synchronization, and data handling. It includes:

- Microcontroller (STM32 or equivalent)
- 12–16 bit ADC
- Shared low-drift crystal oscillator (<20 ppm)
- Hardware timer for timestamping
- USB or BLE communication interface

All three channels share a common sampling clock to minimize inter-channel jitter. Bluetooth is used only for data transmission and not for synchronization.

2.3 Subsystem Requirements

2.3.1 Power Subsystem Requirements

The power subsystem must:

- Provide a regulated 3.3V output within ±0.1V under continuous load.
- Supply at least 500 mA current without voltage droop exceeding 50 mV.
- Maintain output ripple below 10 mV peak-to-peak.
- Electrically isolate analog and digital grounds using proper layout techniques.

If voltage ripple exceeds 10 mV, ECG baseline noise may increase, degrading R-peak detection and violating high-level requirement 1.

2.3.2 ECG Subsystem Requirements

The ECG subsystem must:

- Provide total gain between 500–1000 V/V.
- Achieve input-referred noise < 30 μV RMS.
- Maintain common-mode rejection ratio (CMRR) > 80 dB.
- Implement bandpass filtering between 0.5–40 Hz.
- Output signal amplitude between 0–3.3V for ADC compatibility.

If gain is too low, R-peaks will not be distinguishable.
If gain is too high, signal clipping will occur, invalidating timing detection.

This subsystem directly satisfies High-Level Requirement 1.

2.3.3 Dual PPG Subsystem Requirements

Each PPG channel must:

- Operate at sampling rate ≥ 500 Hz.
- Provide ADC resolution ≥ 12 bits.
- Achieve SNR ≥ 20 dB under resting conditions.
- Maintain channel-to-channel gain mismatch < 2%.
- Maintain channel-to-channel phase skew < 0.5 ms.

If sampling rate is below 500 Hz, temporal resolution becomes insufficient for sub-millisecond timing comparison.

This subsystem directly satisfies High-Level Requirement 2 and 3.

2.4 Tolerance Analysis

Inter-Channel Timing Accuracy

The primary technical risk of this design is achieving sub-millisecond synchronization between the ECG and bilateral PPG channels. Since pulse arrival time differences are the key measurement outcome, timing uncertainty must remain below 1 ms.

Sampling Resolution

The system may sample all channels at:

$$f_s = 1000\,\mathrm{Hz}$$

Thus,

$$T_s = 1\,\mathrm{ms}$$

The maximum timing quantization uncertainty is:

$$\Delta t_{quant} = \pm\frac{T_s}{2} = \pm 0.5\,\mathrm{ms}$$

Oscillator Drift

The crystal oscillator stability is ±20 ppm.
Over a 10-second recording:

$$\Delta t_{drift} = 10\,\mathrm{s} \times 20 \times 10^{-6}$$

$$\Delta t_{drift} = 0.2\,\mathrm{ms}$$

Because all channels share the same clock, drift mainly affects absolute time but is included for conservative estimation.

Inter-Channel Skew

ADC channel switching delay is approximately:

$$\Delta t_{skew} \approx 10\,\mu\mathrm{s} = 0.01\,\mathrm{ms}$$

This contribution is negligible.

Total Timing Uncertainty

$$\Delta t_{total} = 0.5\,\mathrm{ms} + 0.2\,\mathrm{ms} + 0.01\,\mathrm{ms} \approx 0.71\,\mathrm{ms}$$

3. Ethics, safety and societal impact

Ethics

In developing the dual-earlobe PPG system, we will follow the IEEE Code of Ethics by ensuring honesty and realism in reporting performance and limitations. Since the device is intended for research use, we must accurately present measurement accuracy, synchronization error, and noise limitations without exaggeration. We will clearly state that the system is a research prototype and not a medical diagnostic device to prevent misuse.

Because the system collects physiological data, privacy protection is also an ethical responsibility. We will anonymize collected data, limit storage access, and use secure Bluetooth transmission to reduce the risk of data breaches.

Safety and Regulatory Considerations

The device is worn on the earlobes and may be used for long periods, including overnight sleeping research, so electrical and thermal safety are critical. The system will be battery-powered at low voltage, include current-limiting protection, and follow safe PCB design practices to reduce electrical risk. LED drive currents will remain within manufacturer specifications to prevent excessive heating.

If human testing is conducted, we will follow campus policy and seek IRB approval if required. Although the device is not a certified medical product, relevant principles from medical electrical safety standards such as IEC 60601 will be considered during design.

Societal Impact

This project may support research on whether bilateral pulse timing differences correlate with vascular or neurological conditions, such as stroke risk. While the system does not provide medical diagnosis, it could contribute to future non-invasive monitoring technologies.

However, misuse or over-interpretation of results is a potential concern. To mitigate this, we will clearly communicate the experimental nature of the device. Overall, the project promotes accessible physiological monitoring while maintaining responsible engineering practices.